FORD 289-302 V8 Engine Into a 83-97 2WD Ford Ranger or Explorer Engine Swap Motor Mounts

Part# 9716 *(9716 without Pads)*
Part# 9736 *(9736 with Pads)*

THIS KIT INCLUDES:

Qty.	Description
1	9716 - Pair of Engine Mount Plates
2	½" - 13 Hex Nuts
2	½" - Lock Washers
8	½" - Flat Washers
4	½" - 20 X 1 ½" Grade 8 Bolts
4	½" - 20 Locking Nuts
1	1413 Horizontal Oil By-pass Adapter
1	9717 - Pair of Mount Pads *(9736 Only)*

NOTE: The following additional parts are required to complete the installation of this kit:

- Oil Pan - Trans-Dapt #9754
- Oil Pan Pickup - Trans-Dapt #9755
- "Oil Filter Relocation Kit" Trans-Dapt #1113 (single filter) or #1213 (dual filter)
- Hedman Hedders # 89500 Painted, #89506 HTC Coated or #89508 Elite Heavy-Duty.

INSTALLATION INSTRUCTIONS

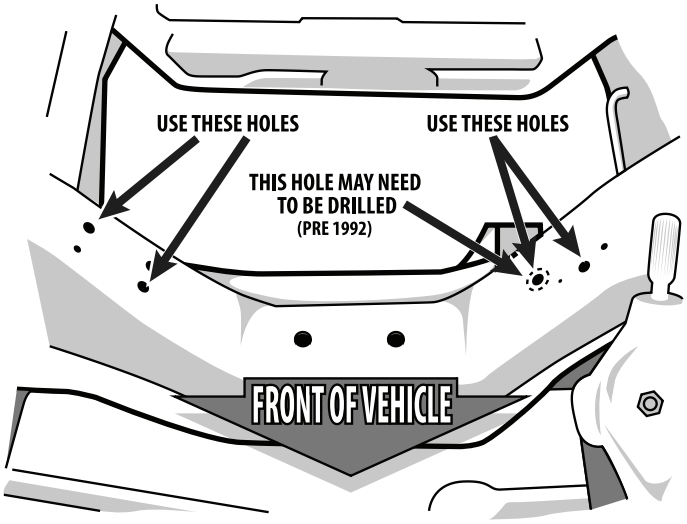

Early (pre-1992) Rangers only:
You will need to drill a hole in the front crossmember to accomodate the driver's side mount. To properly mark the crossmember for drilling, place the driver's side (short mount) mount onto the crossmember, and loosely fasten it using the top hole only. Making certain that the mount is parallel to the ground, and mark the bottom hole location on the driver's side Trans-Dapt mount onto the crossmember. remove the mount from the crossmember, and drill a 1/2" hole.

All models:
It is recommended that a test fit be performed, before final installation of the engine is attempted. If you have purchased a Trans-Dapt #9736 mount kit with mount pads, install the rubber pads onto the engine block. If you purchased a pair of 9716 motor mount plates only, proceed with installing the mounting plates.

In all cases, the oil filter will need to be relocated to prevent interference. Trans-Dapt's #1113 or 1213 double filter unit) oil filter relocation system is the original and most reliable oil filter relocation kit on the market, and is recommended for this Ranger or Explorer engine swap.

The slots in the mount plates allow for adjustment to the engine position once installed. At this time, loosely bolt the plates to the crossmember. Carefully lower the engine into position over the new mounting plates. Place the block at the most forward position allowable by the slots. Make certain the engine is properly leveled. Once you are satisfied with the location of the block, take note of any clearance issues, mark any alterations required, and remove the engine from the engine bay. In many cases, alteration to the passenger side valve cover, air box and driver's side firewall will be required.

Once the required modifications have been made to your engine and/or chassis components, and the engine is placed in its final position, apply a permanent threadlocker (i.e. Loctite™) to the mounting plate bolts, and torque all mount bolts to 75-80 ft/lbs.

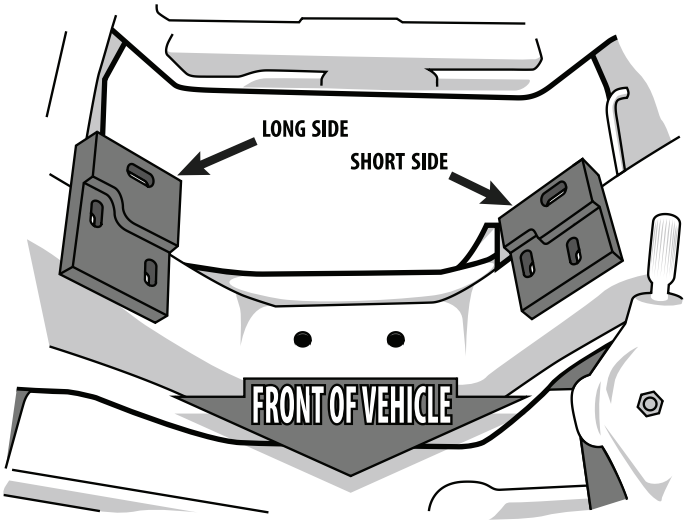

IMPORTANT This product has been design for a specific application combination. Modifications to any of the components will void the product warranty and return privileges. If you have questions regarding the installation of this product, it is strongly recommended that you contact the Trans-Dapt tech support team at techsupport@hedman.com. For further details regarding other aspects of the engine swap, we suggest the use of an aftermarket how-to manual that deals with this specific project.

12438 Putnam Street ■ Whittier, CA 90602 ■ tel (562) 921-0404 ■ fax (562) 921-7515 ■ email: techsupport@hedman.com ■ www.hedman.com